Palco

Design Artec Studio | **iGuzzini**

Last information update: October 2024

Product configuration: QG42
QG42: small body - Neutral White - dimmable electronic ballast - spot optic

Product code
QG42: small body - Neutral White - dimmable electronic ballast - spot optic

Technical description
Adjustable spotlight with adapter for installation on mains electrified track for high output LED lamp with monochrome emission in a Neutral White (4000K) tone. Dimmable electronic ballast integrated in the product. Luminaire made of die-cast aluminium and thermoplastic material, allows 360° rotation about the vertical axis and 90° tilting relative to the horizontal plane. The luminaire has mechanical aiming locks for both movements, operated using the same tool on two screws, one at the side of the rod and one on the adapter for the track. Passive heat dissipation. Spotlight can hold up to two flat accessories at the same time. Another external component can also be applied, selected from directional flaps and an anti-glare screen. All external accessories rotate 360° about the spotlight longitudinal axis.

Installation
On an electrified track with a special base

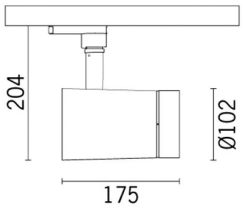

Colour
White (01) | Black (04)

Weight (Kg)
1.28

Mounting
three circuit track

Wiring
The dimmable electronic components are housed in the luminaire

Complies with EN60598-1 and pertinent regulations

IP20 IP40 for optical assembly

Technical data

lm system:	1987
W system:	29.6
lm source:	2700
W source:	26
Luminous efficiency (lm/W, real value):	67.1
lm in emergency mode:	-
Total light flux at or above an angle of 90° [Lm]:	0
Light Output Ratio (L.O.R.) [%]:	74
Beam angle [°]:	12°
CRI (minimum):	97
Colour temperature [K]:	4000
MacAdam Step:	2

Life Time LED 1:	> 50,000h - L90 - B10 (Ta 25°C)
Lamp code:	LED
Number of lamps for optical assembly:	1
ZVEI Code:	LED
Number of optical assemblies:	1
Power factor:	See installation instructions
Inrush current:	5 A / 50 µs
Maximum number of luminaires of this type per miniature circuit breaker:	B10A: 31 luminaires B16A: 50 luminaires C10A: 52 luminaires C16A: 85 luminaires
Minimum dimming %:	1
Overvoltage protection:	4kV Common mode & 2kV Differential mode
Control:	Completo di dimmer

Polar

Imax=21204 cd

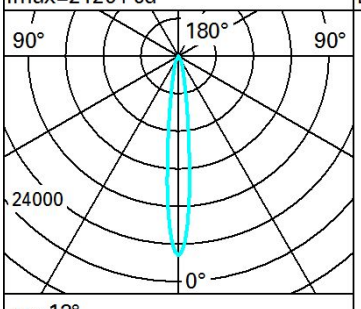

α = 13°

Lux

h	d	Em	Emax
2	0.4	4211	5301
4	0.9	1053	1325
6	1.3	468	589
8	1.8	263	331